15" AXLE COMPONENTS - (311x190)

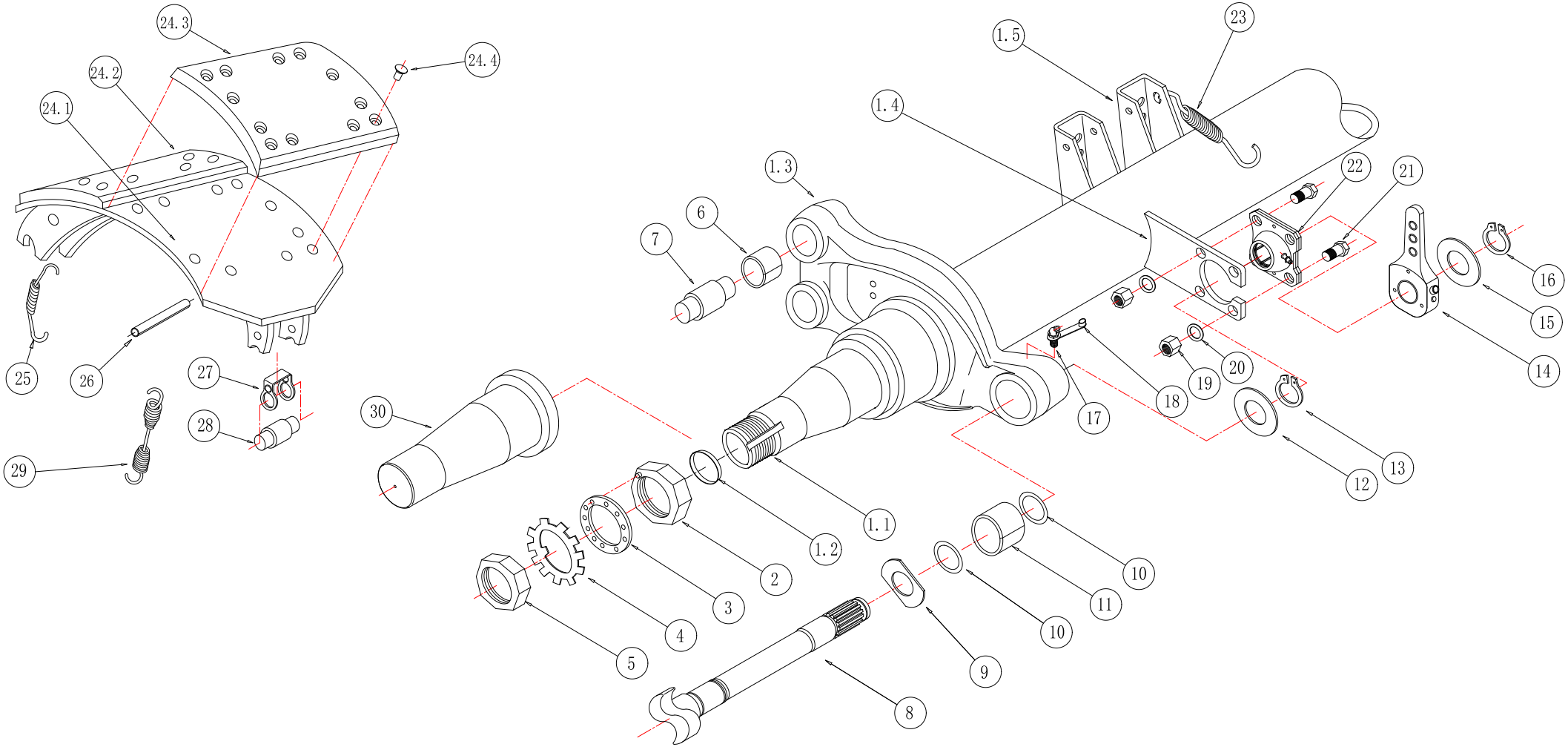

***FUWA* K HITCH AUSTRALIA PTY. LTD.**	*THIS DRAWING AND ALL INFORMATION ON THIS DRAWING IS THE PROPERY OF: FUWA K HITCH AUSTRALIA PTY LTD. AND MAY NOT BE COPIED IN ANY WAY OR FORM WITHOUT THE WRITTEN CONSENT OF: FUWA K HITCH AUSTRALIA PTY LTD.*